ATE ELECTRONICS s.r.l.

MUE CAP
Muecap Bauelemente GmbH
Lochhamer Schlag 11 A, 82166 Gräfelfing
Tel. 089 / 89 80 81-0, Fax: 089 / 854 31 61
info@muecap.de, www.muecap.de

SERIE RB

Resistori a filo in dissipatore di alluminio da 10 W a 250 W

Serie RB

RESISTORI A FILO IN DISSIPATORE DI ALLUMINIO DA 10 W A 250 W

CARATTERISTICHE

Dissipatore ad alta conducibilità termica.
Profilo del radiatore progettato per la massima dissipazione del calore, sia con ventilazione naturale che forzata.
Trattamento superficiale che garantisce un'ottima resistenza agli urti ed agli agenti chimici esterni.
Protezione dell'elemento resistivo realizzato con resina termoindurente che, per l'elevata conduttività termica e la minima distorsione, è adatta a sopportare alte temperature.
Avvolgimento realizzato con uniformità di passo e massima copertura dell'intero supporto, per ottenere un alto fattore dissipativo.
Supporto rettificato per permettere la massima uniformità di avvolgimento.
Marcatura sulla sommità del radiatore per una facile identificazione dopo il montaggio.
Realizzazione di tutte le connessioni mediante puntatura elettrica.

Specifiche

Questi resistori eguagliano o eccedono quanto specificato nella MIL - PRF - 18546 G.

SPECIFICHE ELETTRICHE

- Valori ohmici
Serie E24. Per valori inferiori o superiori alla Gamma Valori consultare il costruttore.
- Tolleranza
Standard 5%. Disponibili su richiesta tolleranze fino a 1%.
- Coefficiente di temperatura
±30 ppm R > 20 Ohm
±50 ppm 1 Ohm < R < 20 Ohm
±100 ppm 0.1 Ohm < R < 1 Ohm
- Rigidità dielettrica
1500 Vac per il tipo RB10
2500 Vac per i tipi RB25 e RB50
3500 Vac per i tipi RB75, RB101, e RB150
4500 Vac per i tipi RB100 E RB250
- Resistenza di isolamento
10000 MOhm minimo
1000 MOhm dopo le prove di umidità.
- Sovraccarico
5 secondi a 5 volte la potenza nominale.
- Non induttivi
Avvolgimenti non induttivi con metodo Ayrton-Perry

SPECIFICHE MECCANICHE

- Sforzo sui terminali
6 Kg alla trazione; 3 Nm per RB100 e 4 Nm per RB250 alla torsione.
- Saldabilità
In accordo con il metodo 208 MIL-STD-202
L'uso di stagno per alte temperature è indispensabile quando i resistori vengono utilizzati a potenze vicine a quella nominale.

MATERIALI

- Supporto
Steatite o allumina rettificato.
- Elemento resistivo
Leghe in rame-nichel o nichel-cromo con coefficiente di temperatura determinato.
- Capsule
Acciaio inox.
- Incapsulante
Resina epossidica per alte temperature (molded)
-Dissipatore
Alluminio anodizzato
- Terminali
Copperweld da RB10 a RB150.
Acciaio inox per RB100 e RB250.

DERATING

Questi resistori possono essere impiegati con temperature da -55°C a +250°C. Per utilizzarli a temperature ambiente maggiori di 25°C occorre tener conto di una riduzione di potenza con derating lineare da piena potenza a zero a 250°C.

Tipo ATE	Tipo MIL-PRF-18546 G	Potenza Nom. (W)	Pmax senza pannello (W)	Gamma Valori (Ohm)	Tensione Limite (V)	Aum.Temp. con pannello (W)	Peso (g)	Dimensioni Pannello (cm² x mm)
RB10	RE65	12	6	0.01-10K	265	5.1	6	415x1
RB25	RE70	25	12.5	0.01-18K	550	3	14	535x1
RB50	RE75	50	20	0.01-68K	1250	1.9	35	930x1.5
RB75	-	75	35	0.1-50K	1400	1.1	85	995x3
RB101	-	100	40	0.1-70K	1900	1	115	995x3
RB150	-	150	55	0.1-100K	2500	1	165	995x3
RB100	RE77	150	75	0.1-100K	1900	0.84	500	930x3
RB250	RE80	250	100	0.1-120K	2300	0.66	900	930x3

ATE ELECTRONICS s.r.l.

MUE CAP
Muecap Bauelemente GmbH
Lochhamer Schlag 11 A, 82166 Gräfelfing
Tel. 089 / 89 80 81-0, Fax: 089 / 854 31 61
info@muecap.de, www.muecap.de

SERIE RB

Resistori a filo in dissipatore di alluminio da 10 W a 250 W

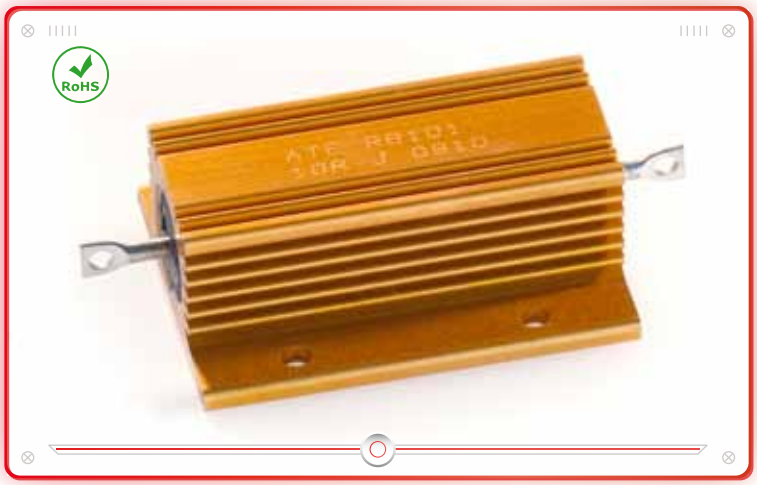

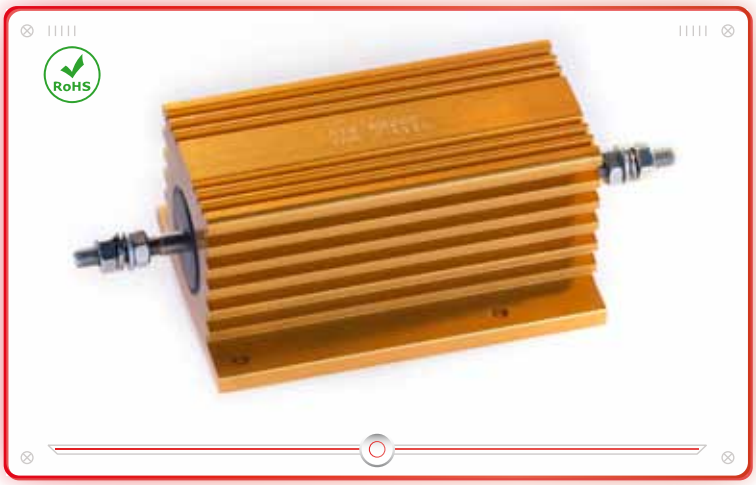

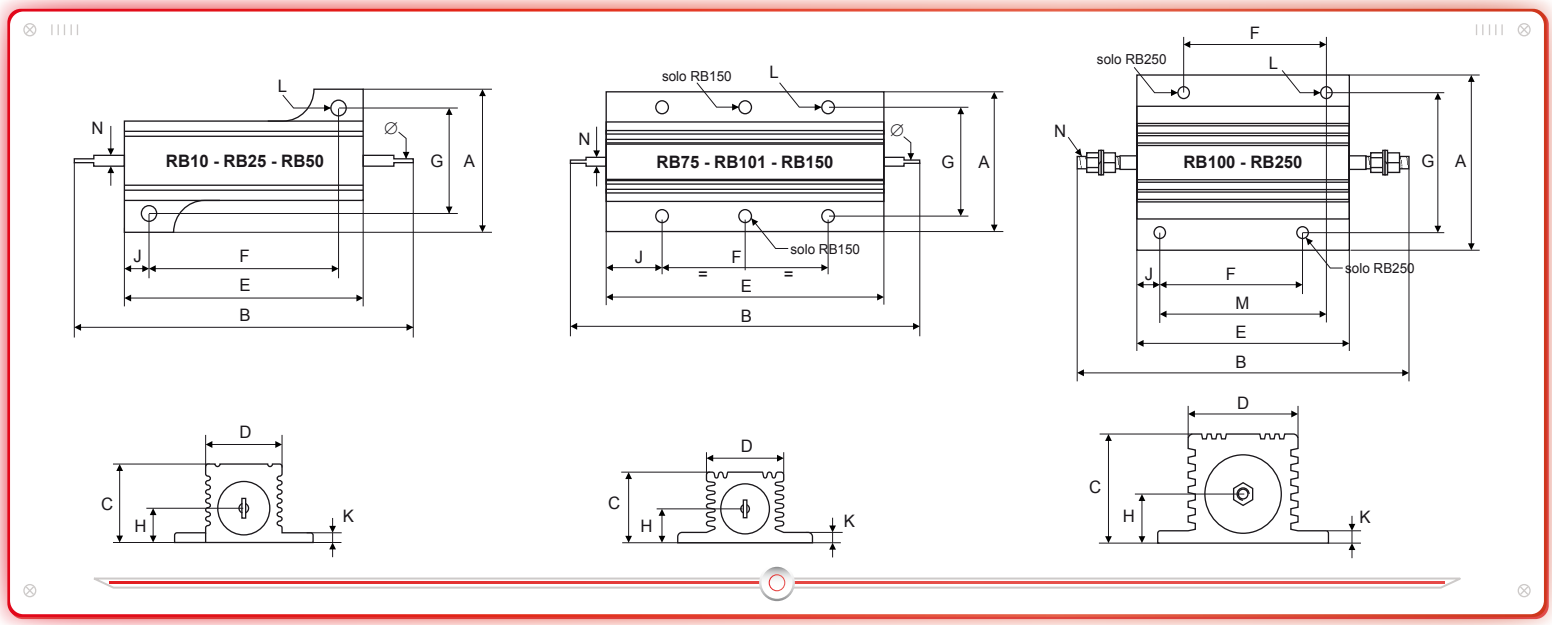

Tipo ATE	Dimensioni (mm)													
	A	B	C	D	E	F	G	H	J	K	L	M	N	Ø
RB10	20.4	35	10	11	19	14.3	15.9	5	2.4	2	2.4	-	2	2.2
RB25	27.2	49	14	14	27	18.3	19.8	6.5	4.4	2	3.2	-	2	2.2
RB50	29.2	71	16	16	50	39.7	21.5	7	5.2	2	3.2	-	2	2.2
RB75	47	73	24	27	48	29	37	11.5	9.5	3.5	4.4	-	3	3.2
RB101	47	89	24	27	64	35	37	11.5	14.5	3.5	4.4	-	3	3.2
RB150	47	122	24	27	97	58	37	11.5	19.5	3.5	4.4	-	3	3.2
RB100	71.5	139	44.5	46	89	-	57.1	20	9.6	5	4.8	69.8	M5	-
RB250	76	178	55.6	54	114	76.2	63.5	25.5	7.8	6.3	4.8	98.4	M6	-
Toll.	±0.2	±1	±0.2	±0.2	±0.5	±0.2	±0.2	±0.2	±0.5	±0.2	±0.2	±0.2	±0.2	±0.2

ATE ELECTRONICS s.r.l.

MUE CAP
Muecap Bauelemente GmbH
Lochhamer Schlag 11 A, 82166 Gräfelfing
Tel. 089 / 89 80 81-0, Fax: 089 / 854 31 61
info@muecap.de, www.muecap.de

RB/6 SERIES

Fixed power wirewound resistors aluminium housed with large creep distance — *RB25/6, RB50/6*

RB/6 Series

FIXED POWER WIREWOUND RESISTORS ALUMINIUM HOUSED WITH LARGE CREEP DISTANCE

These resistors meet or exceed the requirements of MIL - PRF - 18546 G

ELECTRICAL SPECIFICATIONS

- Ohmic values
E24 Series. For out of range or not standard ohmic values, consult ATE Technical Dept.
- Tolerance
Standard 5%. Available on request up to 1%
- Temperature coefficient
From ±100 to ±30 ppm from R10 to Rmax
- Dielectric strength
3000Vac / 4200Vac peak
- Large creep distance
RB25/6 > 6,5mm
RB50/6 > 10mm
- Insulation resistance
10000 MOhm minimum
1000 MOhm after moisture test
- Overload
5s at 5 times rated power
- Non inductive
Models of equivalent physical and electrical specifications are also available with non inductive Ayrton-Perry winding

More technical data as RB25 / RB50 standard

ATE Type	MIL-PRF 18546 G Type	Rated power (W)	Resistance range (Ohm)	Voltage Limit (V)	Weight (g)	Heatsink Dimensions (cm² x mm)
RB25/6	RE70	25	0.1 - 18K	550	13	535 x 1
RB50/6	RE75	50	0.1 - 68K	1250	32	930 x 1.5

ATE Type	Dimensions (mm)													
	A	B	C	D	E	F	G	H	J	K	L	M	N	Ø
RB25/6	19.8	14	27.7	14	6.5	2	18.3	24	49	3.2	12.5	8	4	2.2
RB50/6	21.5	16	29.2	16	7	2	39.7	46	75	3.2	14.5	10	6.5	2.2
Tol.	±0.2	±0.2	±0.2	±0.2	±0.2	±0.2	±0.2	±0.5	±1	±0.2	±1	±0.5	±0.5	±0.2

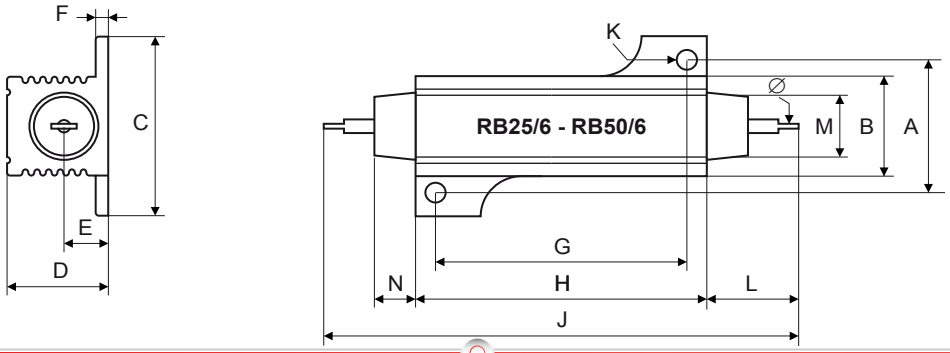

Muecap Bauelemente GmbH
Lochhamer Schlag 11 A, 82166 Gräfelfing
Tel. 089 / 89 80 81-0, Fax: 089 / 854 31 61
info@muecap.de, www.muecap.de

RB/7 SERIES

RB25/7 Fixed power wirewound resistors
RB50/7 aluminium housed with faston leads

RB/7 Series

FIXED POWER WIREWOUND RESISTORS ALUMINIUM HOUSED WITH FASTON LEADS

These resistors meet or exceed the requirements of MIL - PRF - 18546 G specifications

ELECTRICAL SPECIFICATIONS

- Ohmic values
E24 Series. For out of range or not standard ohmic values, consult ATE Technical Dept.
- Tolerance
Standard 5%. Available on request up to 1%
- Temperature coefficient
From ±100 to ±30 ppm from R10 to Rmax
- Dielectric strength
2500Vac / 3500Vac peak
- Insulation resistance
10000 MOhm minimum
1000 MOhm after moisture test
- Overload
5s at 5 times rated power
- Non inductive
Models of equivalent physical and electrical specifications are also available with non inductive Ayrton-Perry winding
- Leads
6.35 mm Faston nickel plated steel, spot welding

More technical data as RB25 / RB50 standard

ATE Type	MIL-PRF 18546 G Type	Rated power (W)	Resistance range (Ohm)	Voltage limit (V)	Weight (g)	Heatsink dimensions (cm² x mm)
RB25/7	RE70	25	0.1 - 18K	550	13	535 x 1
RB50/7	RE75	50	0.1 - 68K	1250	32	930 x 1.5

ATE Type	Dimensions (mm)												
	A	B	C	D	E	F	G	H	J	K	L	M	P
RB25/7	19.8	14	27.7	14	6.5	2	18.3	27	69	3.2	21	6.35	7.7
RB50/7	21.5	16	29.2	16	7	2	39.7	50	91	3.2	20.5	6.35	8.2
Tol.	±0.2	±0.2	±0.2	±0.2	±0.2	±0.2	±0.2	±0.5	±2	±0.2	±2	-	±1

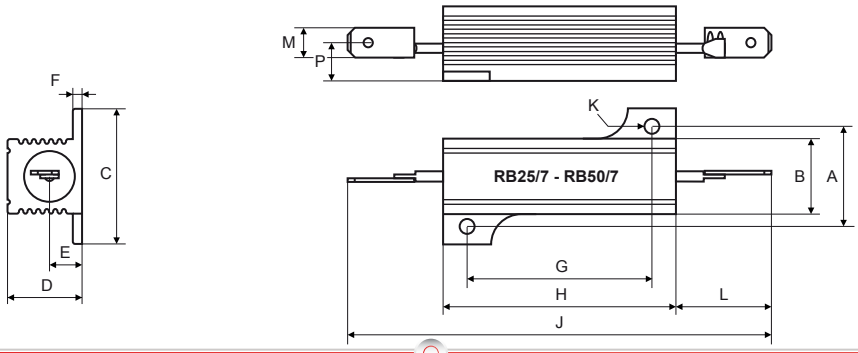

Muecap Bauelemente GmbH
Lochhamer Schlag 11 A, 82166 Gräfelfing
Tel. 089 / 89 80 81-0, Fax: 089 / 854 31 61
info@muecap.de, www.muecap.de

RB/8 SERIES

Fixed power wirewound resistors aluminium housed with screw leads (TOP) RB50/8

RB/8 Series

FIXED POWER WIREWOUND RESISTORS ALUMINIUM HOUSED WITH SCREW LEADS (TOP)

These resistors meet or exceed the requirements of MIL - PRF - 18546 G specifications

ELECTRICAL SPECIFICATIONS

- *Ohmic values*
  E24 Series. For out of range or not standard ohmic values, consult ATE Technical Dept.
- *Tolerance*
  Standard 5%. Available on request up to 1%
- *Temperature coefficient*
  From ±100 to ±30 ppm from R10 to Rmax
- *Dielectric strength*
  2500Vac / 3500Vac peak
- *Insulation resistance*
  10000 MOhm minimum
  1000 MOhm after moisture test
- *Overload*
  5s at 5 times rated power
- *Non inductive*
  Models of equivalent physical and electrical specifications are also available with non inductive Ayrton-Perry winding
- *Leads*
  M4 threaded hole
- *Terminal screw tightening torque*
  1,5Nm (static)

More technical data as RB50 standard

ATE Type	MIL-PRF 18546 G Type	Rated power (W)	Resistance range (Ohm)	Voltage limit (V)	Weight (g)	Heatsink dimensions (cm² x mm)
RB50/8	RE75	50	0.1 - 68K	1250	52	930 x 1.5

ATE Type	Dimensions (mm)															
	A	B	C	D	F	G	H	J	K	L	M	N	P	Q	R	S
RB50/8	21.5	16	29.2	16	2	39.7	50	79.5	3.2	14.5	M4	8	65	17.5	18.5	16.5
Tol.	±0.2	±0.2	±0.2	±0.2	±0.2	±0.2	±0.5	±2	±0.2	±0.5	-	-	±1	±0.5	±0.5	±0.5

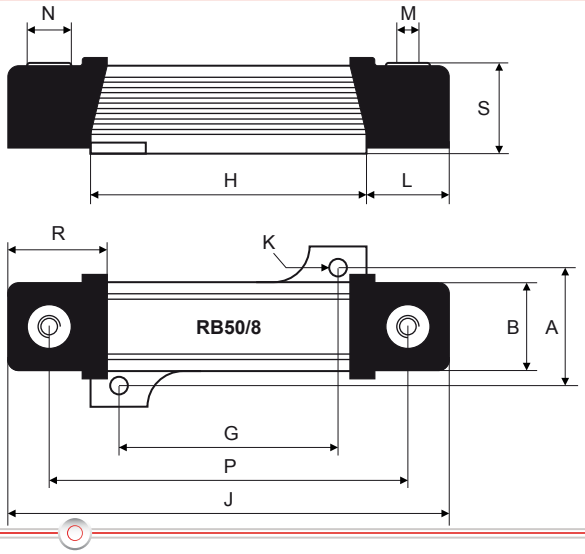

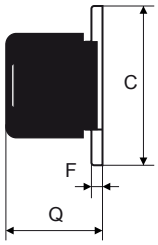

Connection screws supplied with the resistor

MUE CAP
Muecap Bauelemente GmbH
Lochhamer Schlag 11 A, 82166 Gräfelfing
Tel. 089 / 89 80 81-0, Fax: 089 / 854 31 61
info@muecap.de, www.muecap.de

ATE ELECTRONICS s.r.l.

RB106 SERIES

RB106 Fixed power wirewound resistors
RB256 aluminium housed with large creep distance

RB106 Series

FIXED POWER WIREWOUND RESISTORS ALUMINIUM HOUSED WITH LARGE CREEP DISTANCE

These resistors meet or exceed the requirements of MIL - PRF - 18546 G specifications

ELECTRICAL SPECIFICATIONS

- *Ohmic values*
E24 Series. For out of range or not standard ohmic values, consult ATE Technical Dept.
- *Tolerance*
Standard 5%. Available on request up to 1%
- *Temperature coefficient*
From ±100 to ±30 ppm from R10 to Rmax
- *Dielectric strength*
5000Vac / 7000Vac peak
- *Large creep distance*
RB106 > 22mm
RB256 > 25 mm
- *Insulation resistance*
10000 MOhm minimum
1000 MOhm after moisture test
- *Overload*
5s at 5 times rated power
- *Non inductive*
Models of equivalent physical and electrical specifications are also available with non inductive Ayrton-Perry winding

More technical data as RB100 and RB250 standard

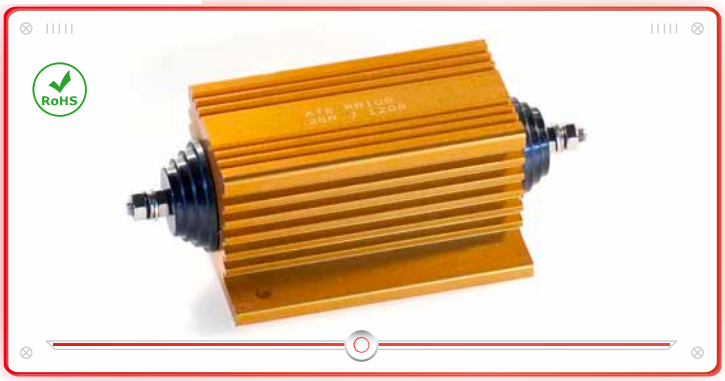

ATE Type	MIL-PRF 18546 G Type	Rated power (W)	Resistance Range (Ohm)	Voltage limit (V)	Weight (g)	Heatsink dimensions (cm² x mm)
RB106	RE77	150	0.1 - 100K	1900	500	930 x 3
RB256	RE80	250	0.1 - 120K	2300	900	930 x 3

ATE Type	Dimensions (mm)																
	A	B	C	D	E	F	G	H	J	K	P	Q	R	S	T	V	Z
RB106	57.1	46	71.5	44.5	20	5	69.8	89	139	4.8	-	-	25	9.6	M5	32	12
RB256	63.5	54	76	55.6	25.5	6.3	98.4	114	178	4.8	22.2	76.2	32	7.8	M6	32	16
Tol.	±0.2	±0.5	±0.5	±0.5	±0.5	±0.5	±0.2	±0.5	±2	±0.2	±0.2	±0.2	±0.2	±0.5	-	-	-